Cambridge International AS & A Level

Cambridge International Examinations
Cambridge International Advanced Subsidiary and Advanced Level

PHYSICS **9702/12**

Paper 1 Multiple Choice **May/June 2014**

1 hour

Additional Materials: Multiple Choice Answer Sheet
Soft clean eraser
Soft pencil (type B or HB is recommended)

* 3 5 7 1 6 8 3 9 6 8 *

READ THESE INSTRUCTIONS FIRST

Write in soft pencil.
Do not use staples, paper clips, glue or correction fluid.
Write your name, Centre number and candidate number on the Answer Sheet in the spaces provided unless this has been done for you.
DO **NOT** WRITE IN ANY BARCODES.

There are **forty** questions on this paper. Answer **all** questions. For each question there are four possible answers **A**, **B**, **C** and **D**.
Choose the **one** you consider correct and record your choice in **soft pencil** on the separate Answer Sheet.

Read the instructions on the Answer Sheet very carefully.

Each correct answer will score one mark. A mark will not be deducted for a wrong answer.
Any working should be done in this booklet.
Electronic calculators may be used.

IB14 06_9702_12/4RP
© UCLES 2014

Data

speed of light in free space, $c = 3.00 \times 10^{8}\,\text{m s}^{-1}$

permeability of free space, $\mu_0 = 4\pi \times 10^{-7}\,\text{H m}^{-1}$

permittivity of free space, $\varepsilon_0 = 8.85 \times 10^{-12}\,\text{F m}^{-1}$

$\left(\frac{1}{4\pi\varepsilon_0} = 8.99 \times 10^{9}\,\text{m F}^{-1}\right)$

elementary charge, $e = 1.60 \times 10^{-19}\,\text{C}$

the Planck constant, $h = 6.63 \times 10^{-34}\,\text{J s}$

unified atomic mass constant, $u = 1.66 \times 10^{-27}\,\text{kg}$

rest mass of electron, $m_\text{e} = 9.11 \times 10^{-31}\,\text{kg}$

rest mass of proton, $m_\text{p} = 1.67 \times 10^{-27}\,\text{kg}$

molar gas constant, $R = 8.31\,\text{J K}^{-1}\,\text{mol}^{-1}$

the Avogadro constant, $N_\text{A} = 6.02 \times 10^{23}\,\text{mol}^{-1}$

the Boltzmann constant, $k = 1.38 \times 10^{-23}\,\text{J K}^{-1}$

gravitational constant, $G = 6.67 \times 10^{-11}\,\text{N m}^2\,\text{kg}^{-2}$

acceleration of free fall, $g = 9.81\,\text{m s}^{-2}$

© UCLES 2014

Formulae

uniformly accelerated motion, $s = ut + \frac{1}{2}at^2$

$v^2 = u^2 + 2as$

work done on/by a gas, $W = p\Delta V$

gravitational potential, $\phi = -\frac{Gm}{r}$

hydrostatic pressure, $p = \rho gh$

pressure of an ideal gas, $p = \frac{1}{3}\frac{Nm}{V}\langle c^2 \rangle$

simple harmonic motion, $a = -\omega^2 x$

velocity of particle in s.h.m., $v = v_0 \cos \omega t$

$v = \pm \omega \sqrt{(x_0^2 - x^2)}$

electric potential, $V = \frac{Q}{4\pi\varepsilon_0 r}$

capacitors in series, $1/C = 1/C_1 + 1/C_2 + \ldots$

capacitors in parallel, $C = C_1 + C_2 + \ldots$

energy of charged capacitor, $W = \frac{1}{2}QV$

resistors in series, $R = R_1 + R_2 + \ldots$

resistors in parallel, $1/R = 1/R_1 + 1/R_2 + \ldots$

alternating current/voltage, $x = x_0 \sin \omega t$

radioactive decay, $x = x_0 \exp(-\lambda t)$

decay constant, $\lambda = \frac{0.693}{t_{\frac{1}{2}}}$

© UCLES 2014

1 The maximum theoretical power P of a wind turbine is given by the equation

$$P = k\rho A v^n$$

where ρ is the density of air, A is the area swept by the turbine blades, v is the speed of the air and k is a constant with no units.

What is the value of n?

A 1 **B** 2 **C** 3 **D** 4

2 What is the unit of resistance when expressed in SI base units?

A $\mathrm{kg\,m^2\,s^{-2}\,A^{-1}}$

B $\mathrm{kg\,m^2\,s^{-3}\,A^{-2}}$

C $\mathrm{kg\,m\,s^{-2}\,A^{-1}}$

D $\mathrm{kg\,m\,s^{-3}\,A^{-1}}$

Space for working

© UCLES 2014

3 A cathode-ray oscilloscope (c.r.o.) is connected to an alternating voltage. The following trace is produced on the screen.

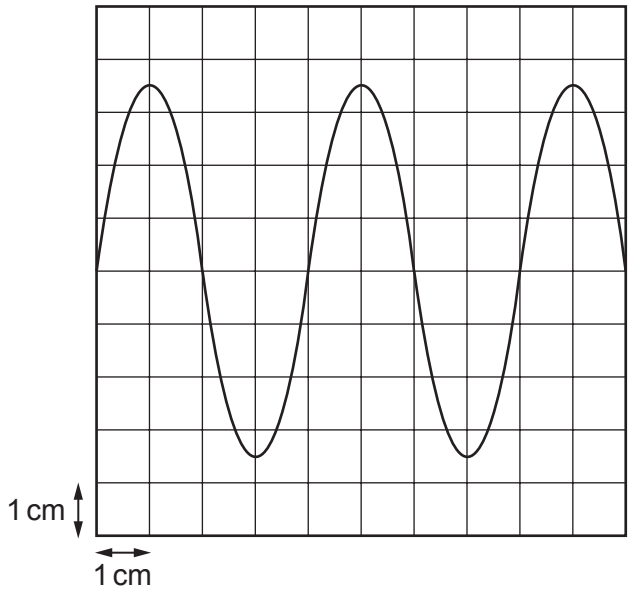

The oscilloscope time-base setting is $0.5\,\text{ms}\,\text{cm}^{-1}$ and the Y-plate sensitivity is $2\,\text{V}\,\text{cm}^{-1}$.

Which statement about the alternating voltage is correct?

A The amplitude is 3.5 cm.

B The frequency is 0.5 kHz.

C The period is 1 ms.

D The wavelength is 4 cm.

Space for working

4 A quantity y is to be determined from the equation shown.

$$y = \frac{px}{q^2}$$

The percentage uncertainties in p, x and q are shown.

	percentage uncertainty
p	6%
x	2%
q	4%

What is the percentage uncertainty in y?

A 0.5 % **B** 1 % **C** 16 % **D** 192 %

5 A thermometer can be read to an accuracy of ± 0.5 °C. This thermometer is used to measure a temperature rise from 40 °C to 100 °C.

What is the percentage uncertainty in the measurement of the temperature rise?

A 0.5 % **B** 0.8 % **C** 1.3 % **D** 1.7 %

Space for working

© UCLES 2014

6 A radio-controlled toy car travels along a straight line for a time of 15 s.

The variation with time t of the velocity v of the car is shown below.

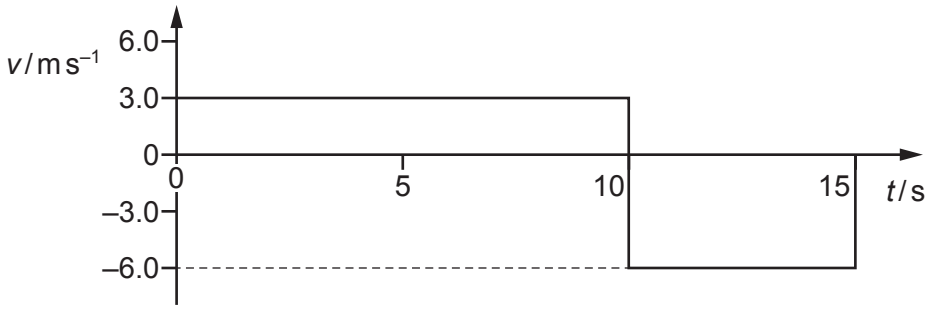

What is the average velocity of the toy car for the journey shown by the graph?

A $-1.5\,m\,s^{-1}$ **B** $0.0\,m\,s^{-1}$ **C** $4.0\,m\,s^{-1}$ **D** $4.5\,m\,s^{-1}$

7 Two train carriages each of mass 5000 kg roll toward one another on a level track. One is travelling at $2.00\,m\,s^{-1}$ and the other at $1.00\,m\,s^{-1}$, as shown.

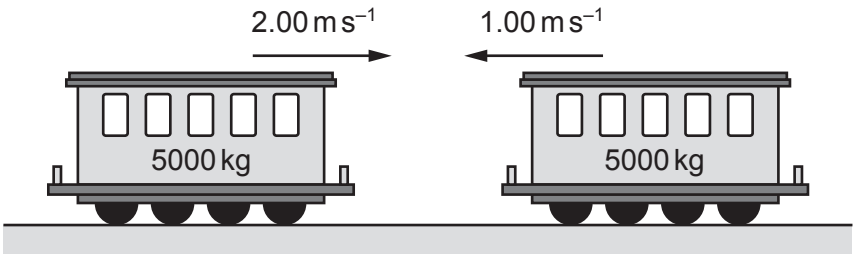

They collide and join together.

What is the kinetic energy lost during the collision?

A 1250 J **B** 7500 J **C** 11 250 J **D** 12 500 J

Space for working

8 A resultant force causes a body to accelerate.

What is equal to the resultant force?

A the acceleration of the body per unit mass

B the change in kinetic energy of the body per unit time

C the change in momentum of the body per unit time

D the change in velocity of the body per unit time

9 A ship of mass 8.4×10^7 kg is approaching a harbour with speed $16.4\,m\,s^{-1}$. By using reverse thrust it can maintain a constant total stopping force of 920 000 N.

How long will it take to stop?

A 15 seconds

B 150 seconds

C 25 minutes

D 250 minutes

10 A tractor of mass 1000 kg is connected by a tow-bar to a trailer of mass 1000 kg. The total resistance to motion has a constant value of 4000 N. One quarter of this resistance acts on the trailer.

When the tractor and trailer are moving along horizontal ground at a constant speed of $6\,m\,s^{-1}$, what is the force exerted on the tractor by the tow-bar?

A 0 N **B** 1000 N **C** 3000 N **D** 4000 N

Space for working

© UCLES 2014

11 The graph shows the variation with time of the speed of a raindrop falling vertically through air.

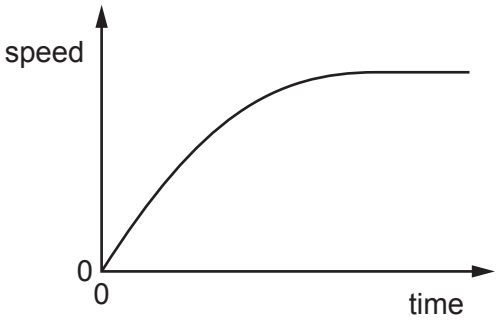

Which statement is correct?

A The acceleration decreases to produce a steady speed.

B The acceleration increases as the speed increases.

C The air resistance decreases as the speed increases.

D The resultant force increases as the speed increases.

12 A tiny oil droplet with mass 6.9×10^{-13} kg is at rest in an electric field of electric field strength 2.1×10^{7} N C^{-1}, as shown.

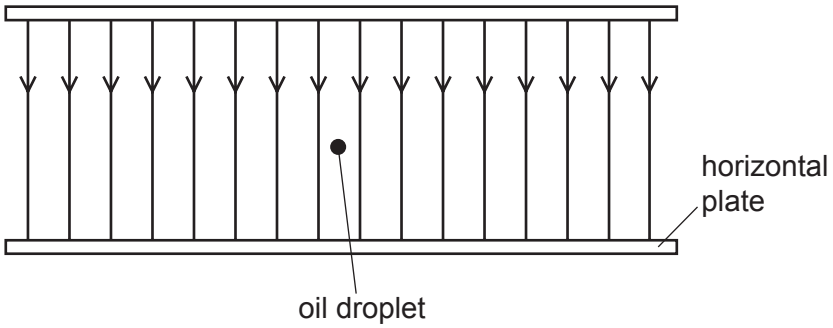

The weight of the droplet is exactly balanced by the electrical force on the droplet.

What is the charge on the droplet?

A 3.3×10^{-20} C

B -3.3×10^{-20} C

C 3.2×10^{-19} C

D -3.2×10^{-19} C

Space for working

13 The diagram shows four forces applied to a circular object.

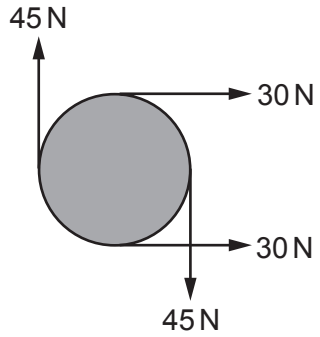

Which of the following describes the resultant force and resultant torque on the object?

	resultant force	resultant torque
A	non-zero	non-zero
B	non-zero	zero
C	zero	non-zero
D	zero	zero

Space for working

© UCLES 2014

14 A mass at point X inside a uniform gravitational field experiences a gravitational force of 0.200 N. It has 1.00 J of gravitational potential energy.

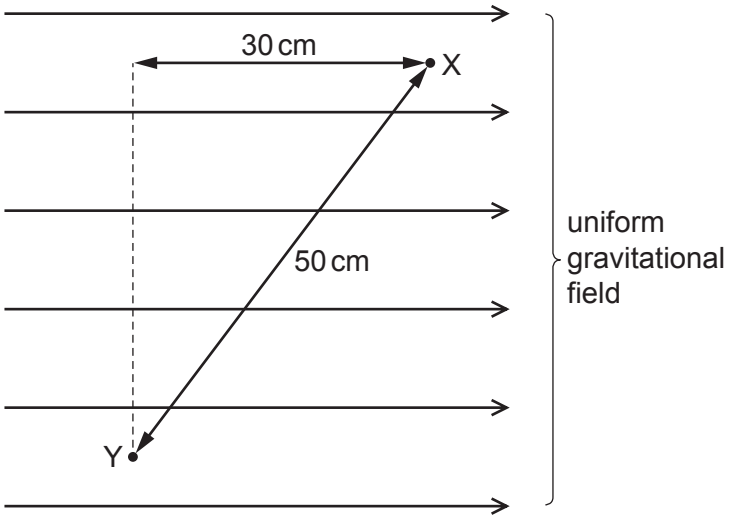

The mass is then moved to point Y.

What is its new gravitational potential energy?

A 0.90 J **B** 0.94 J **C** 1.06 J **D** 1.10 J

Space for working

15 A small mass is placed at point P on the inside surface of a smooth hemisphere. It is then released from rest. When it reaches the lowest point T, its speed is $4.0\,m\,s^{-1}$.

The diagram (not to scale) shows the speed of the mass at other points Q, R and S as it slides down. Air resistance is negligible.

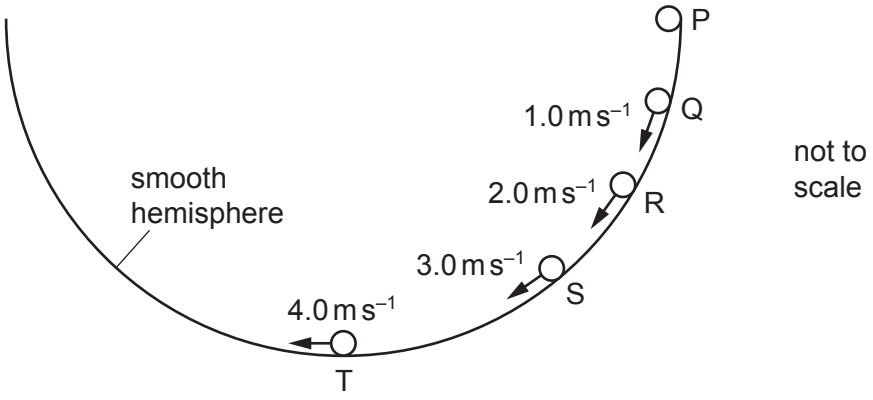

The mass loses potential energy E in falling from P to T.

At which point has the mass lost potential energy $\frac{E}{4}$?

A Q

B R

C S

D none of these

Space for working

16 An escalator is 60 m long and lifts passengers through a vertical height of 30 m, as shown.

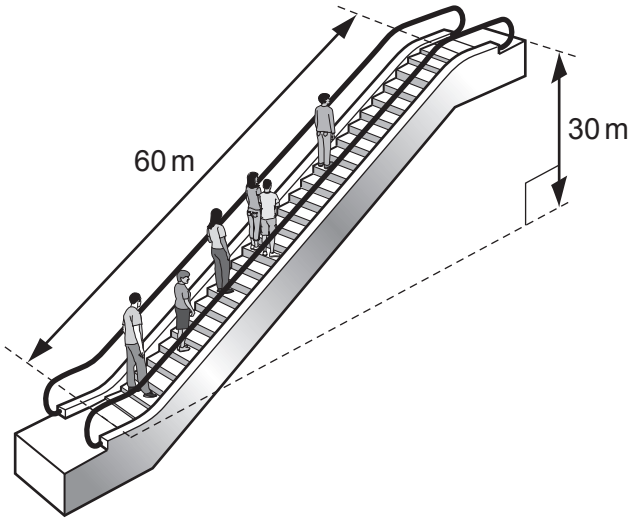

To drive the escalator against the forces of friction when there are no passengers requires a power of 2.0 kW.

The escalator is used by passengers of average mass 60 kg and the power to overcome friction remains constant.

How much power is required to drive the escalator when it is carrying 20 passengers and is travelling at 0.75 m s^{-1}?

A 4.4 kW **B** 6.4 kW **C** 8.8 kW **D** 10.8 kW

17 If the Universe was such that the speed of the molecules in a substance increased with temperature but at any particular temperature the speed of all the molecules in a substance was the same, which process would **not** occur?

A boiling

B condensation

C evaporation

D melting

Space for working

© UCLES 2014

18 Liquid Q has twice the density of liquid R.

At depth x in liquid R, the pressure due to the liquid is 4 kPa.

At what depth in liquid Q is the pressure due to the liquid 7 kPa?

A $\frac{2x}{7}$ **B** $\frac{7x}{8}$ **C** $\frac{8x}{7}$ **D** $\frac{7x}{2}$

19 A sample of metal is subjected to a force which increases to a maximum value and then decreases back to zero. A force-extension graph for the sample is shown.

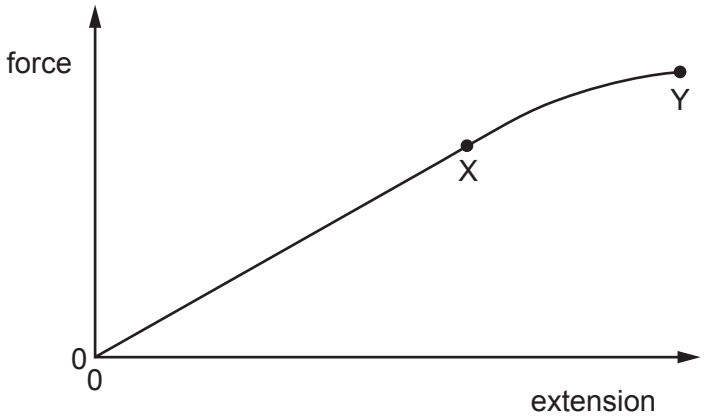

When the sample contracts it follows the same force-extension curve as when it was being stretched.

What is the behaviour of the metal between X and Y?

A both elastic and plastic

B not elastic and not plastic

C plastic but not elastic

D elastic but not plastic

Space for working

© UCLES 2014

20 The graph shows the length of a spring as it is stretched by an increasing load.

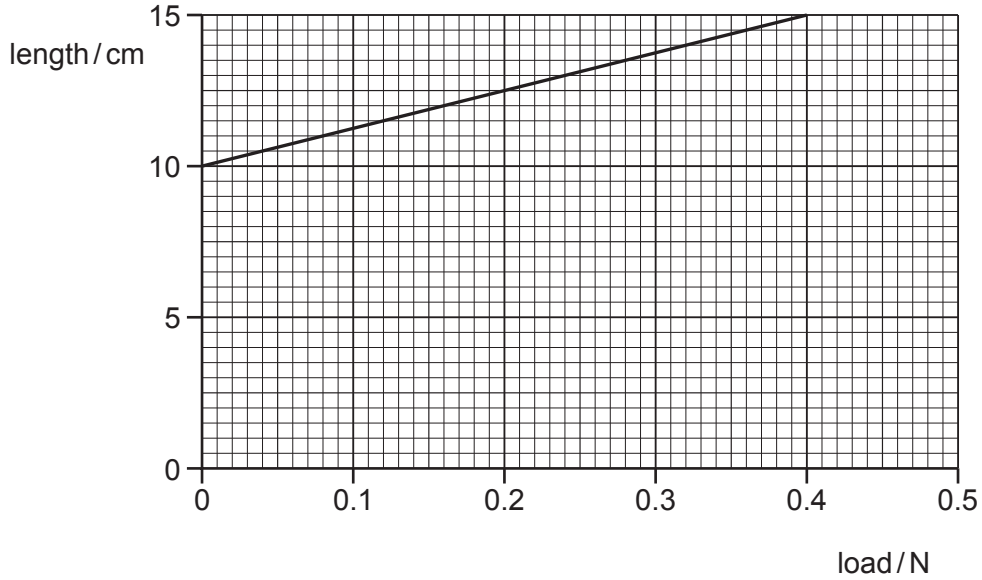

What is the spring constant?

A $8.0\,N\,m^{-1}$ **B** $2.7\,N\,m^{-1}$ **C** $0.13\,N\,m^{-1}$ **D** $0.080\,N\,m^{-1}$

Space for working

21 A composite rod is made by attaching a glass-reinforced plastic rod and a nylon rod end to end, as shown.

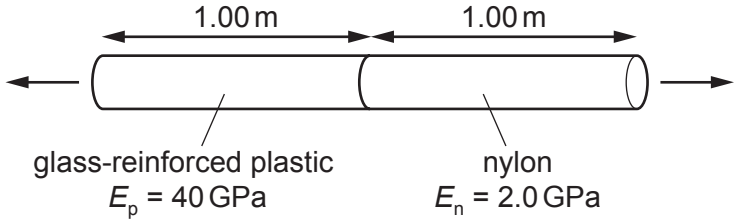

The rods have the same cross-sectional area and each rod is 1.00 m in length. The Young modulus E_p of the plastic is 40 GPa and the Young modulus E_n of the nylon is 2.0 GPa.

The composite rod will break when its total extension reaches 3.0 mm.

What is the greatest tensile stress that can be applied to the composite rod before it breaks?

A 7.1×10^{-14} Pa

B 7.1×10^{-2} Pa

C 5.7×10^{6} Pa

D 5.7×10^{9} Pa

Space for working

© UCLES 2014

22 What, to two significant figures, are the period, the frequency and the amplitude of the wave represented by the graph?

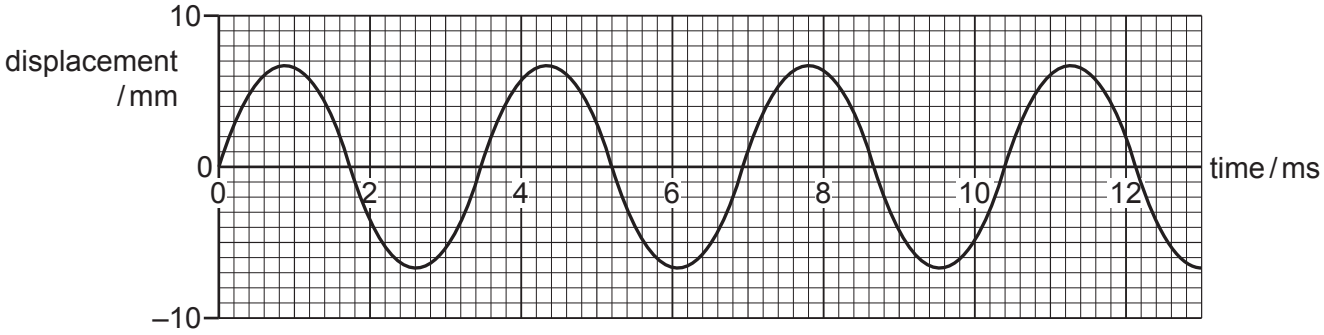

	period / s	frequency / Hz	amplitude / m
A	0.0027	370	0.0067
B	0.0031	320	0.013
C	0.0035	290	0.0067
D	0.0042	240	0.013

Space for working

23 A sound wave consists of a series of moving pressure variations from the normal, constant air pressure.

The graph shows these pressure variations for two waves at one instant in time.

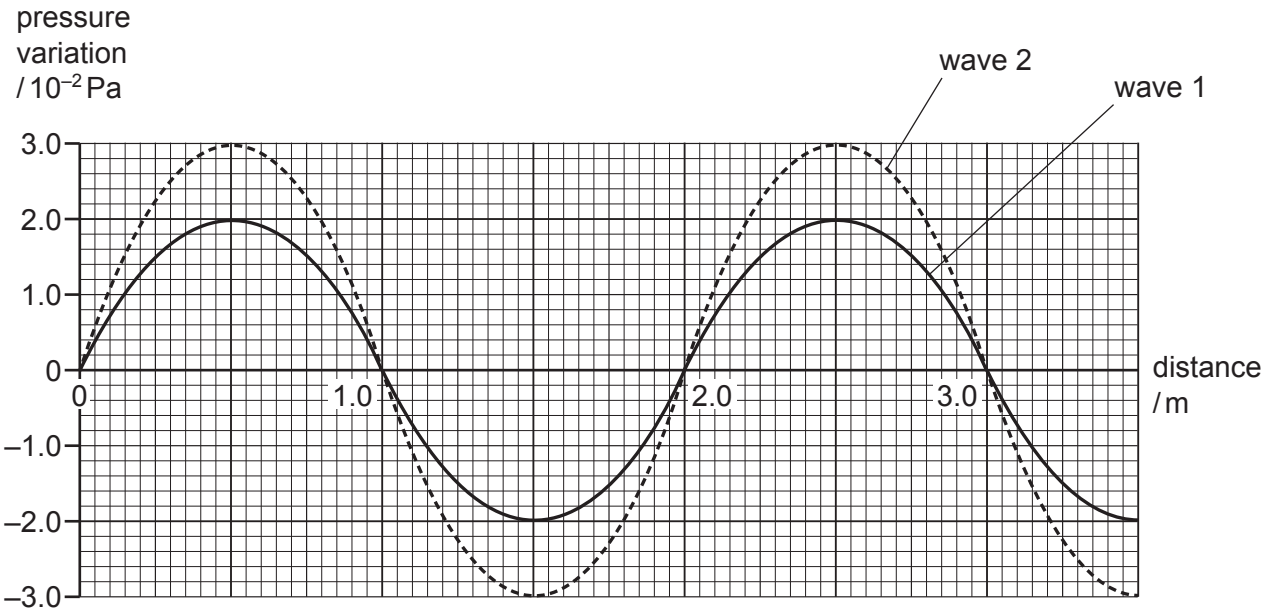

Wave 1 has an intensity of $1.6 \times 10^{-6}\,W\,m^{-2}$.

What is the intensity of wave 2?

A $2.4 \times 10^{-6}\,W\,m^{-2}$

B $3.0 \times 10^{-6}\,W\,m^{-2}$

C $3.6 \times 10^{-6}\,W\,m^{-2}$

D $4.5 \times 10^{-6}\,W\,m^{-2}$

Space for working

© UCLES 2014

24 The diagram shows a vertical cross-section through a water wave moving from left to right.

At which point is the water moving upwards with maximum speed?

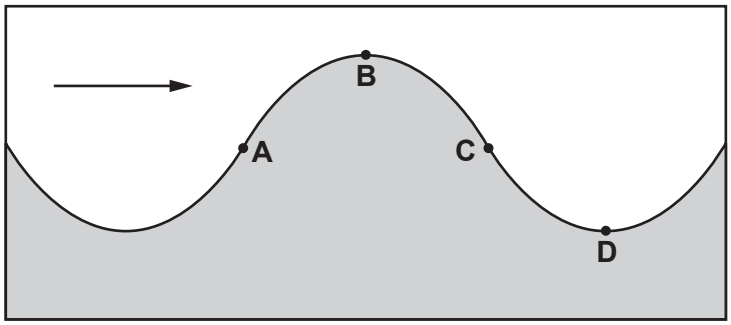

25 The principle of superposition states that a certain quantity is added when two or more waves meet at a point.

What is this quantity?

A amplitude

B displacement

C intensity

D wavelength

Space for working

© UCLES 2014

26 Light passes through a diffraction grating ruled at 1000 lines per cm and the same wavelength of light also passes through two narrow slits 0.5 mm apart. Both situations produce intensity maxima and minima on a screen.

Which statement about the separation of the maxima on the screen and the sharpness of the maxima is correct?

A The diffraction grating maxima are less widely spaced and are less sharp than the two-slit maxima.

B The diffraction grating maxima are less widely spaced and are sharper than the two-slit maxima.

C The diffraction grating maxima are more widely spaced and are less sharp than the two-slit maxima.

D The diffraction grating maxima are more widely spaced and are sharper than the two-slit maxima.

Space for working

© UCLES 2014

27 The diagram shows an experiment which has been set up to demonstrate two-source interference. Microwaves of wavelength λ pass through two slits S_1 and S_2.

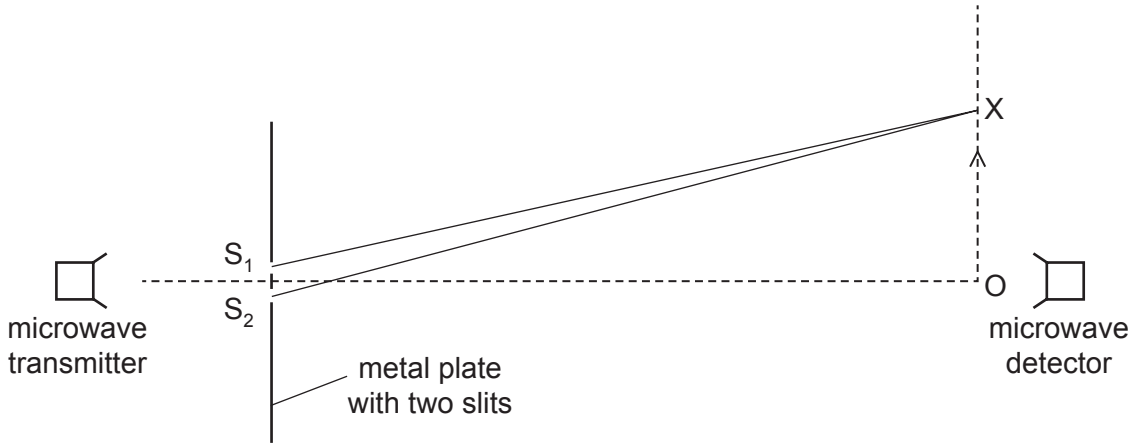

The detector is moved from point O in the direction of the arrow. The signal detected decreases until the detector reaches point X, and then starts to increase again as the detector moves beyond X.

Which equation correctly determines the position of X?

A $OX = \lambda$

B $OX = \lambda/2$

C $S_2X - S_1X = \lambda$

D $S_2X - S_1X = \lambda/2$

Space for working

© UCLES 2014

28 Two positive charges and one negative charge, all of equal magnitude, are set at the corners of an equilateral triangle.

Which diagram best represents the electric field surrounding the charges?

A

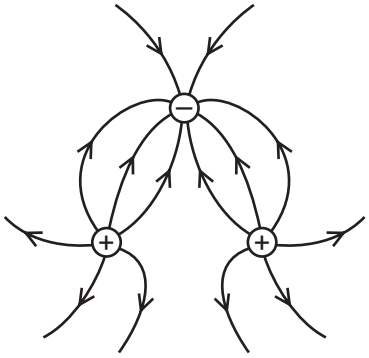

B

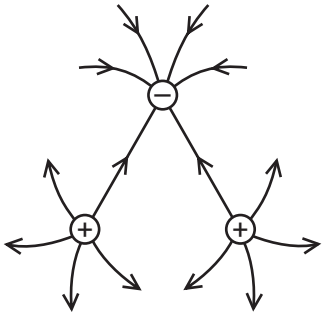

C

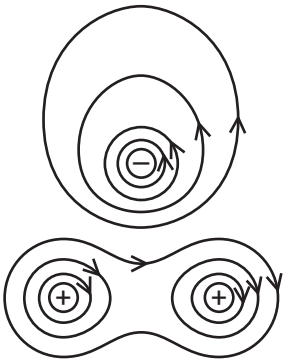

D

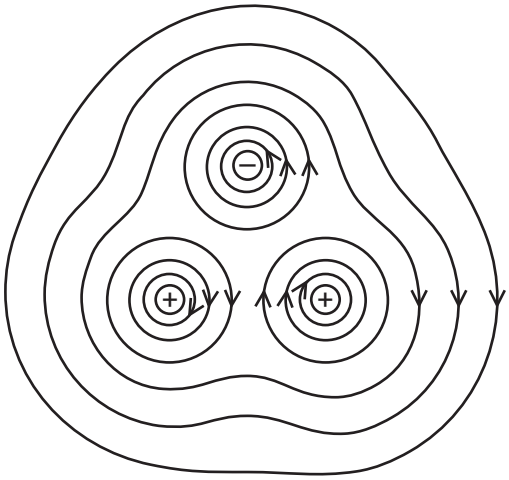

Space for working

29 Two oppositely-charged horizontal metal plates are placed in a vacuum. A positively-charged particle starts from rest and moves from one plate to the other plate, as shown.

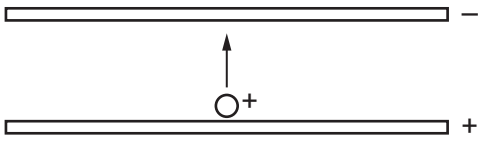

Which graph shows how the kinetic energy E_K of the particle varies with the distance x moved from the positive plate?

A

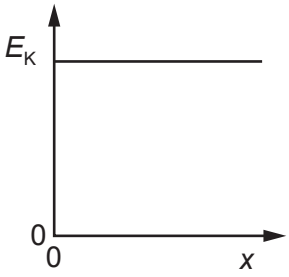

B

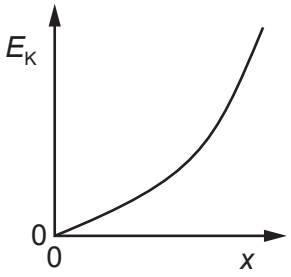

C

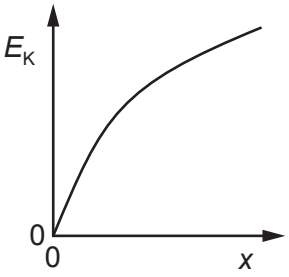

D

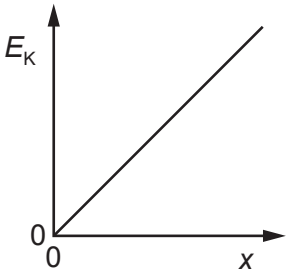

Space for working

30 A battery of electromotive force (e.m.f.) V and negligible internal resistance is connected to a 1 kΩ resistor, as shown.

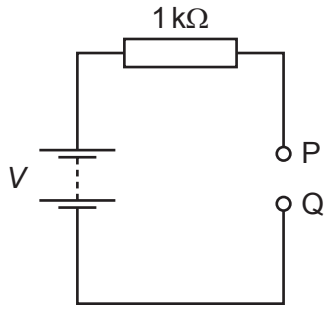

A student attempts to measure the potential difference (p.d.) between points P and Q using two voltmeters, one at a time. The first voltmeter has a resistance of 1 kΩ and the second voltmeter has a resistance of 1 MΩ.

What are the readings of the voltmeters?

	reading on voltmeter with 1 kΩ resistance	reading on voltmeter with 1 MΩ resistance
A	$\frac{V}{2}$	$\frac{V}{2}$
B	$\frac{V}{2}$	V
C	V	$\frac{V}{2}$
D	V	V

31 A copper wire is to be replaced by an aluminium alloy wire of the same length and resistance. Copper has half the resistivity of the alloy.

What is the ratio $\frac{\text{diameter of alloy wire}}{\text{diameter of copper wire}}$?

A $\sqrt{2}$ **B** 2 **C** $2\sqrt{2}$ **D** 4

Space for working

32 The diagram shows an electric pump for a garden fountain connected by an 18 m cable to a 230 V mains electrical supply.

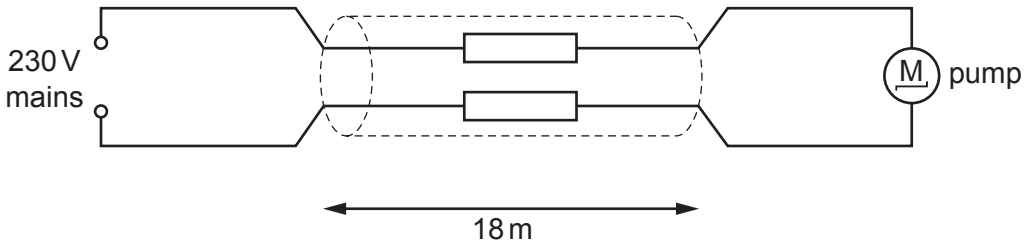

The performance of the pump is acceptable if the potential difference (p.d.) across it is at least 218 V. The current through it is then 0.83 A.

What is the maximum resistance per metre of each of the two wires in the cable if the pump is to perform acceptably?

A $0.40\,\Omega\,m^{-1}$ **B** $0.80\,\Omega\,m^{-1}$ **C** $1.3\,\Omega\,m^{-1}$ **D** $1.4\,\Omega\,m^{-1}$

33 Cell X has an e.m.f. of 2.0 V and an internal resistance of 2.0 Ω. Cell Y has an e.m.f. of 1.6 V and an internal resistance of 1.2 Ω. These two cells are connected to a resistor of resistance 0.8 Ω, as shown.

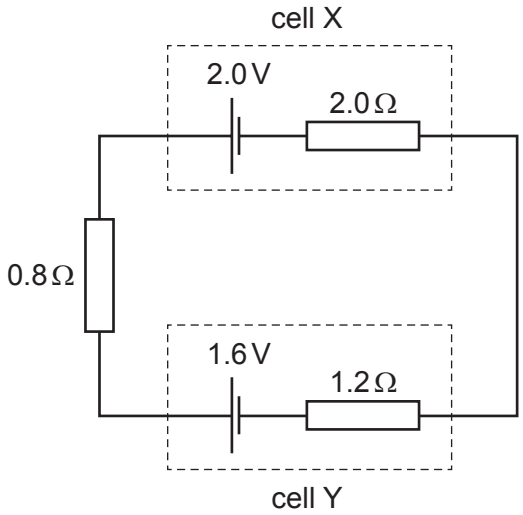

What is the current in cell X?

A 0.10 A **B** 0.50 A **C** 0.90 A **D** 1.0 A

Space for working

34 In the circuit shown, a light-dependent resistor (LDR) is connected to two resistors R_1 and R_2. The potential difference (p.d.) across R_1 is V_1 and the p.d. across R_2 is V_2. The current in the circuit is I.

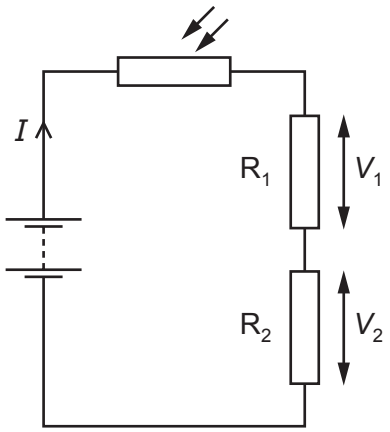

Which statement about this circuit is correct?

A The current I increases when the light intensity decreases.

B The LDR is an ohmic conductor.

C The p.d. V_2 increases when the light intensity decreases.

D The ratio $\frac{V_1}{V_2}$ is independent of light intensity.

Space for working

© UCLES 2014

35 A power supply and a solar cell are compared using the potentiometer circuit shown.

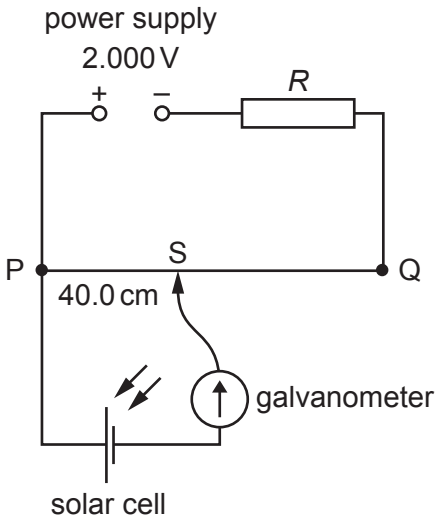

The e.m.f. produced by the solar cell is measured on the potentiometer.

The potentiometer wire PQ is 100.0 cm long and has a resistance of 5.00 Ω. The power supply has an e.m.f. of 2.000 V and the solar cell has an e.m.f. of 5.00 mV.

Which resistance *R* must be used so that the galvanometer reads zero when PS = 40.0 cm?

A 395 Ω **B** 795 Ω **C** 995 Ω **D** 1055 Ω

Space for working

36 In the circuit shown, all the resistors are identical.

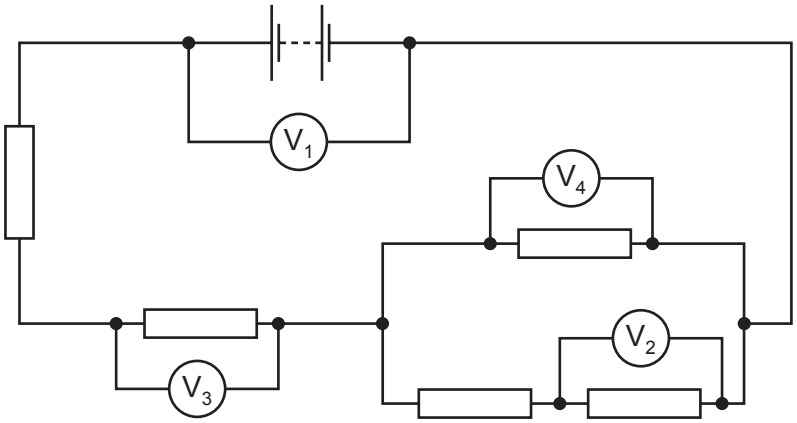

The reading on voltmeter V_1 is 8.0 V and the reading on voltmeter V_2 is 1.0 V.

What are the readings on the other voltmeters?

	reading on voltmeter V_3 / V	reading on voltmeter V_4 / V
A	1.5	1.0
B	3.0	2.0
C	4.5	3.0
D	6.0	4.0

Space for working

© UCLES 2014

37 The diagram shows a light-dependent resistor (LDR) and a thermistor forming a potential divider.

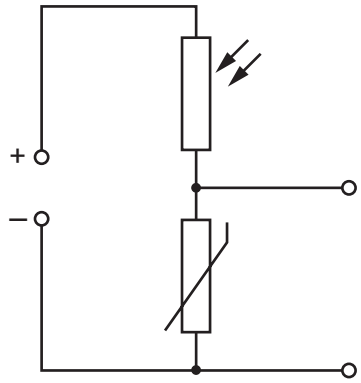

Under which set of conditions will the potential difference across the thermistor have the greatest value?

	illumination	temperature
A	low	low
B	high	low
C	low	high
D	high	high

38 A nucleus X decays into a nucleus Y by emitting an alpha particle followed by two beta particles.

Which statement about this nuclear decay is correct?

A Beta particle decay occurs when a proton changes into a neutron.

B Nucleus Y has the same nucleon number as nucleus X.

C Nucleus Y is an isotope of nucleus X.

D The total mass of the products is equal to the mass of the initial nucleus X.

Space for working

© UCLES 2014

39 A slow-moving neutron collides with a nucleus of uranium-235. This results in a nuclear reaction that is represented by the following nuclear equation

$$^{235}_{92}\mathrm{U} + ^{1}_{0}\mathrm{n} \rightarrow ^{154}_{60}\mathrm{Nd} + ^{80}_{32}\mathrm{Ge} + \mathrm{x}$$

where x represents one or more particles.

What does x represent?

A one neutron

B two electrons

C two neutrons

D two protons

40 The first artificial radioactive substance was made by bombarding aluminium, $^{27}_{13}\mathrm{A}l$, with α-particles. This produced an unstable isotope of phosphorus, $^{30}_{15}\mathrm{P}$.

What was the by-product of this reaction?

A an α-particle

B a β-particle

C a neutron

D a proton

Space for working

© UCLES 2014

BLANK PAGE

BLANK PAGE

Permission to reproduce items where third-party owned material protected by copyright is included has been sought and cleared where possible. Every reasonable effort has been made by the publisher (UCLES) to trace copyright holders, but if any items requiring clearance have unwittingly been included, the publisher will be pleased to make amends at the earliest possible opportunity.

Cambridge International Examinations is part of the Cambridge Assessment Group. Cambridge Assessment is the brand name of University of Cambridge Local Examinations Syndicate (UCLES), which is itself a department of the University of Cambridge.